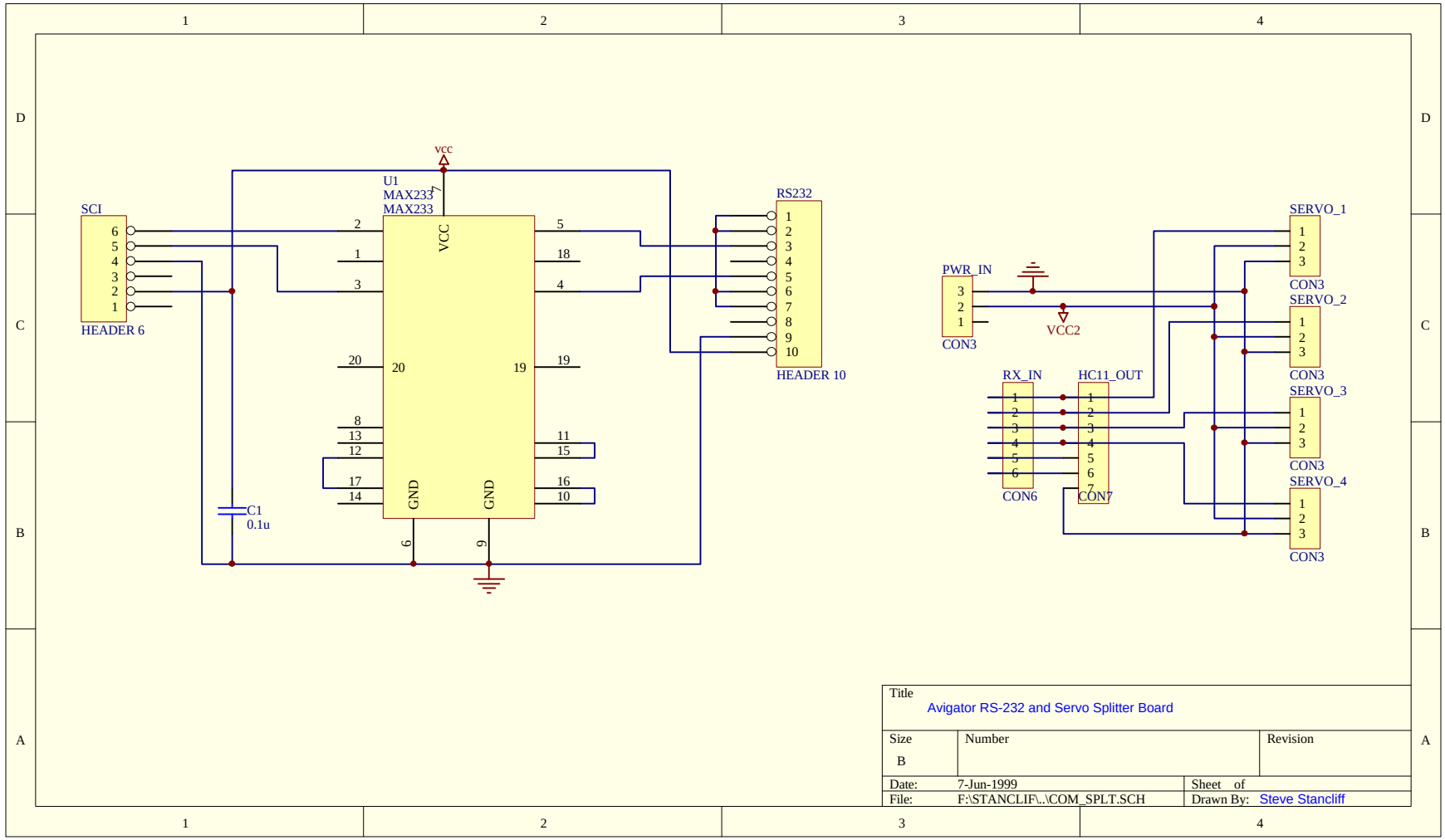
SCI
HEADER 6
U1
MAX233
MAX233
VCC
GND
GND
C1
0.1u
RS232
HEADER 10
PWR_IN
CON3
VCC2
RX_IN
CON6
HC11_OUT
CON7
SERVO_1
CON3
SERVO_2
CON3
SERVO_3
CON3
SERVO_4
CON3
Title
Avigator RS-232 and Servo Splitter Board
Size
B
Number
Revision
Date: 7-Jun-1999
Sheet of
File: F:\STANCLIF\..\COM_SPLT.SCH
Drawn By: Steve Stancliff